奥威特液压机械
AOVITE HYDRAULIC MECHANICAL

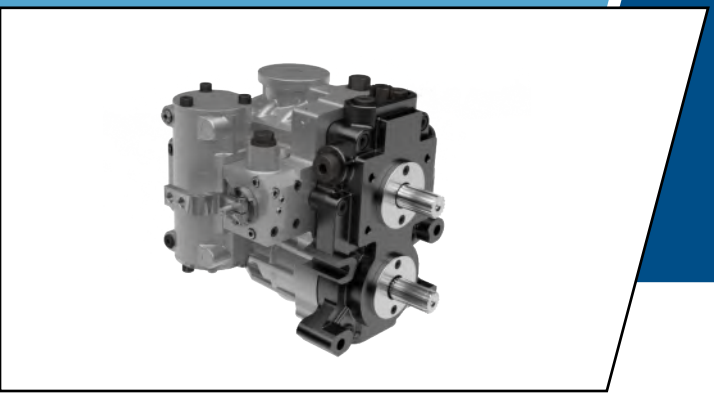

强劲动力 精准控制

WHPM系列说明书

DRIVE&CONTROL
传动与控制

型号说明 Type Code

WHP	M	52	/	10	L	-	T1	-	DT1	-	N	-	HW	-	A
01	02	03		04	05		06		07		08		09		10

轴向柱塞元件 Axial Piston Unit

01	斜盘结构变量柱塞泵 Swashplate design,Variable pump
02	斜盘结构定量柱塞马达 Swashplate design,Fixed motor

规格 Size

03	排量 Displacement (ml/r)	52	58

系列 Series

04	版本号 Model	10
		20

旋转方向 Rotation

05	泵 Pump	顺时针 Clockwise	R
		逆时针 Anti-clockwise	L
	马达 Motor	双向 Bi direction	B

输入/出轴 Input/output Shaft

06	输入 Input	18齿；Φ24.6；端面距离59 Spindle distance table 59	仅10版本可选 OPT,Only 10	T1
	输出 Output	18齿；Φ24.6；端面距离56 Spindle distance table 56		
	输入 Input	18齿；Φ24.6；端面距离50 Spindle distance table 50	仅20版本可选 OPT,Only 20	T2
	输出 Output	18齿；Φ24.6；端面距离56 Spindle distance table 56		

输出法兰尺寸式 Output flange dimension

	可选项 OPT	法兰直径 Flange-OD	法兰厚度 Flange-THK	选项 OPT
07	T1	Φ62	6	DT1
			11.5	DT2
			14.5	DT3
		Φ72	7	DT4
	T2	Φ72	7	DT5

手柄位置 Control hand Location

08	手柄安装左侧 Control hand in the left	M
	手柄安装右侧 Control hand in the right	N

控制方式 Control Mode

09	机械伺服控制 Mechinery servo control		HW
	电气比例控制 Electric proportional control	U=12VDC	EP3
		U=24VDC	EP4

滤清器 Filter

10	无滤清器 None filter	N
	配带滤清器 With filter	A
	外接滤清器 External filter	C

AOVITE 奥威特液压机械 AOVITE HYDRAULIC MECHANICAL

注意事项：

液压系统设计要求

1. 考虑主机的工作环境，应采用闭式油箱，并安装空气过滤器。 同时对系统油箱做合理设置 ，以确保进口压力不低于0.08Mpa，否则会造成油泵吸空。最低清洁度按IS0440616/19级。
2. 合理设置冷却器,使主机连续工作时,系统工作油液温度不超过本产品所允许最高油温80℃。
3. 合理设计系统管道,使壳体回油压力不超过0.15Mpa。

安装使用

1. 输出传动轴与泵输入轴的同轴度误差应小于Φ0.05,马达输出轴与泵输入轴的安装尺寸为105±0.025。
2. 所有与液压系统连接的管接头、堵头及测量接头必须保持清洁，避免任何颗粒杂质进入液压系统。
3. 主机启动前，系统各管道内应充满液压油，无极变速器壳体腔否则将由于润滑不良造成产品损坏。
4. 主机操作时，前进、后退、换向应平稳，以减少冲击，提高使用寿命。若主机使用过程中出现异常现象，如操作不灵、行走乏力、尖叫声等，应立即停车，检查，直到故障排除为止。

维护保养

1. 液压油：推荐使用va46#抗体液压油，油液污染等级不低于NAS16389级。工作油温温度-20°C~+80°C,更换期一般为600小时，如果液压油被水或其它外部物质污染或承受异常运转情况，应视具体情况及时更换液压油。
2 .滤清器：若选择了配带的滤清器建议首次使用100小时后予以更换，建议之后600小时更换一次。
3 .散热器：本产品在油温为常温时，可获得最大输出功率，因此需定期检查系统散热器外部是否堵塞并清洗干净。

Notes

Hydraulic system design requirements

1. Considering the working environment of the main engine, closed fuel tank should be used and air filter should be installed. At the same time, the system oil tank shall be reasonably set to ensure that the inlet pressure is not less than 0.08mpa, otherwise the oil pump will be empty.The minimum cleanliness level is IS0440616/19.
2. Set the cooler reasonably, so that when the main engine is working continuously, the working oil temperature of the system does not exceed the maximum allowed oil t emperature of the product 80℃.
3. Reasonable design of system pipeline, so that the oil return pressure of the shell does not exceed 0.15mpa.

Installation and use

1. The coaxiality error between the output drive shaft and the pump input shaft should be less than ϕ 0.05, and the installation size of the motor output shaft and the pump input shaft should be 105±0.025.
2. All pipe joints, plugs and measuring joints connected with the hydraulic system must be kept clean to avoid any particle impurities entering the hydraulic system.
3. Before the main engine starts, each pipe in the system should be filled with hydraulic oil. Otherwise, the product will be damaged due to poor lubrication.
4. When the main engine is operating, forward, backward and reversing should be stable to reduce impact and improve service life. If there are abnormal phenomena in the use of the main engine, such as ineffective operation, weak walking, screaming, etc., it should be stopped immediately and checked until the fault is removed.

Maintain

1. Hydraulic oil: It is recommended to use VA46 # antibody hydraulic oil, the oil pollution level is not lower than NAS16389. The working oil temperature is -20℃~+80℃, and the r eplacement period is generally 600 hours. If the hydraulic oil is polluted by water or other external substances or suffers abnormal operation, the hydraulic oil should be replaced in time according to the specific situation.
2. Filter: If the filter with the belt is selected, it is recommended to replace it after 100 hours of first use, and it is recommended to replace it once after 600 hours.
3. Radiator: The maximum output power can be obtained when the oil temperature is normal. Therefore, it is necessary to regularly check whether the outside of the system radiator is blocked and clean it.

过滤器安装说明：

AOVITE
DELIVERING CUSTOMER VALUE

液压过滤器
PN.07022325

安装使用说明

1. 在密封垫圈表明涂上少量液压油
2. 当密封面接触后再旋紧1/2圈
3. 启动发动机
4. 检查密封性

- 过滤精度50um
- 最大工作压力50bar
- 建议首次使用100小时后予以更换，之后每600小时更换一次

07022325

AOVITE
DELIVERING CUSTOMER VALUE

Hydraulic Filter
PN.07022325

Installation instruction

1. Apply a film of oil to the filter gasket
2. Tighten 1/2 turn after filter gasket contact base
3. Start engine
4. Check for leaks

- Filtration rating 50um
- Maximun working pressure 50bar
- We recommend that element is replaced after first 100 hours service and every 600 hours service thereafter

(05)旋转方向 Rotation

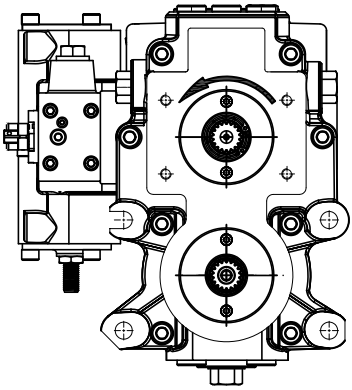

输入方向：逆时针 标记为：L
Input Rotation (CCW) Mark (L)

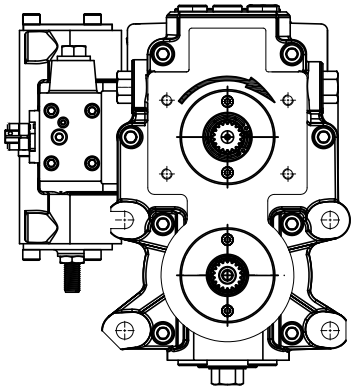

输入方向：顺时针 标记为：R
Input Rotation (CW) Mark (R)

(08)手柄位置选择 Control Hand Location

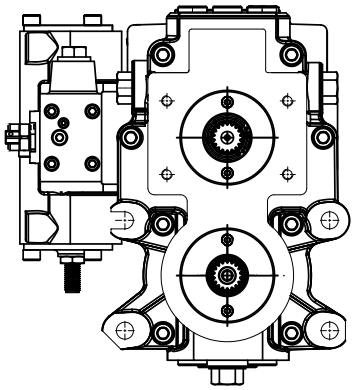

手柄位置置于左侧 标记为：M
Contorl hand in the left side Mark (M)

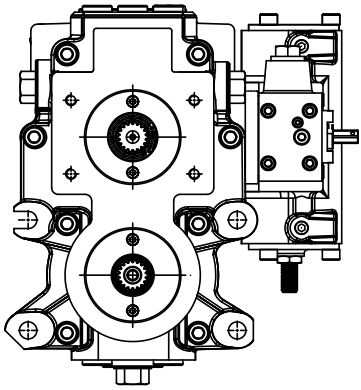

手柄位置置于右侧 标记为：N
Contorl hand in the right side Mark (N)

(04) & (06) & (07)

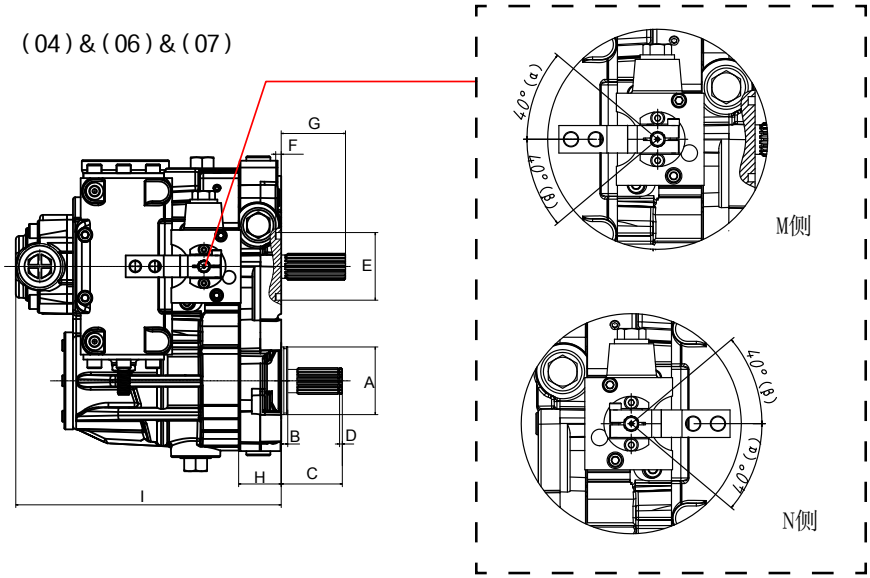

输入轴方向 Input Rotation	手柄位置 Control hand location	α	β	备注 Remark
L	M	右旋(CW)	左旋(CCW)	对应输出轴旋转方向 Match the output shaft' s rotation
	N	左旋(CCW)	右旋(CW)	
R	M	左旋(CCW)	右旋(CW)	
	N	右旋(CW)	左旋(CCW)	

选项 OPT \ 代号 PN / 名称 DES		A 马达侧法兰直径 DIAM-Motor flange	B 马达侧法兰厚度 THK-Motor flange	C 马达侧传动轴长 L-Motor shaft	D 卡簧槽与轴端面距 from groove to end face	E 泵侧凹槽/法兰厚度 DIAM-Pump groove/flange	备注 Remark
T1	DT1	Φ62	6	56	2.5	凹槽内Φ50*外Φ62 groove Φ50*DIAMΦ62	10版与20版后盖安装孔距不同，详情与销售代表联系。 The model '10' and '20' are different in Installtion holes. The details data please contact with us.
	DT2		11.5				
	DT3		14.5				
	DT4	Φ72	7				
T2	DT5	Φ72	7		5	Φ72	

选项 OPT \ 代号 PN / 名称 DES		F 泵侧凹槽/法兰厚度 THK-Pump groove/flange	G 泵侧传动轴长 L-Pump shaft	H 后盖厚度 THK-Rear coupling	I 后盖至补油泵厚度 THK from Rear coupling to charge Pump	版本 Edition
T1	DT1	深5 depth 5	59	39	244	10
	DT2					
	DT3					
	DT4					
T2	DT5	凸7 (convex 7)	50	49	254	20

螺纹插孔尺寸规格说明 Port’s description			
代号 PN	名称	Description	规格及接口标准接口名称 Size
S1	补油泵吸油口	Charge pump’s inlet port	G3/4” O-RING BOSS(JIS B2351)
S2	补油泵回油口	Charge pump’s return port	G1/2” O-RING BOSS(JIS B2351)
B	阀体低压油进口	Inlet port	G1/2” O-RING BOSS(JIS B2351)
$P_{g\alpha}$,$P_{g\beta}$	压力检测口	Test port-Interior	G3/8” O-RING BOSS(JIS B2351)
T1,T2	泄油口	Return port	G3/4” O-RING BOSS(JIS B2351)
X1,X2	油缸测压口	Test port-Cylinder	M10*1

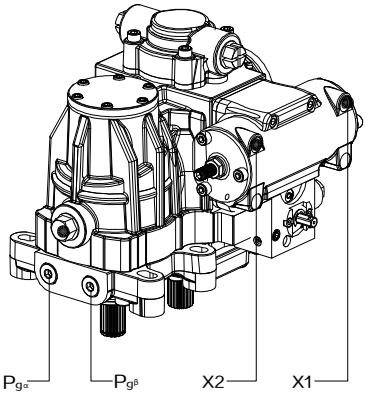

手柄位置“M”或“N”不影响油路接口的方式，即如图1.1所示此装置的手柄位于“M”侧，连接方式如图所示，若手柄位于“N”侧,也按下图所示连接。

Handle position "M" or "N" side does not affect. As shown in Fig1.1,whatever handle position in which side,the connection’s type should be same.

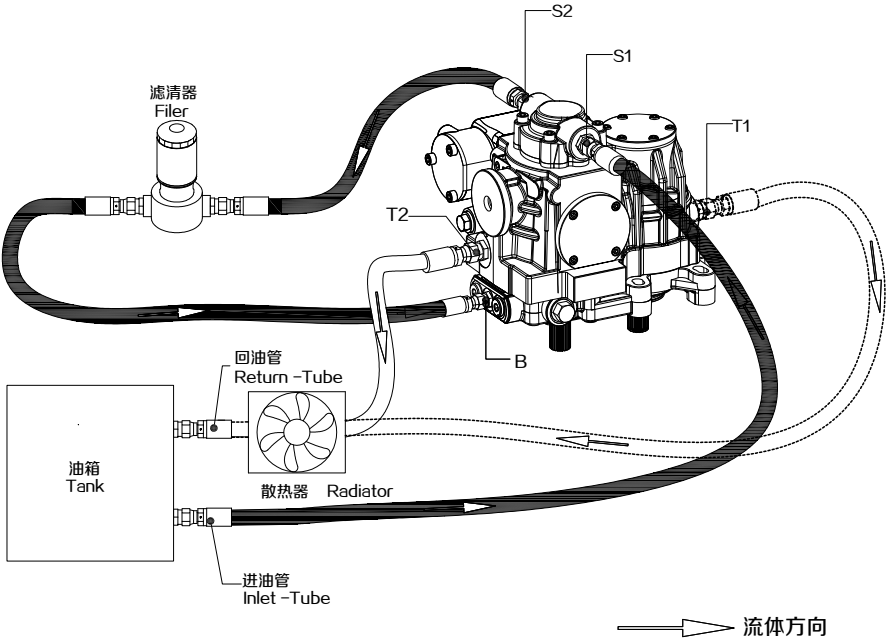

图1.1

*用户根据产品使用空间选择T1或T2连接方式,
选择其中一种即可。

螺纹插孔尺寸规格说明 Port’s description			
代号 PN	名称	Description	规格及接口标准接口名称 Size
S1	补油泵吸油口	Charge pump’s inlet port	G3/4” 0-RING BOSS(JIS B2351)
S2	补油泵回油口	Charge pump’s return port	G1/2” 0-RING BOSS(JIS B2351)
B	阀体低压油进口	Inlet port	G1/2” 0-RING BOSS(JIS B2351)
$P_{g\alpha}$,$P_{g\beta}$	压力检测口	Test port-Interior	G3/8” 0-RING BOSS(JIS B2351)
T1,T2	泄油口	Return port	G3/4” 0-RING BOSS(JIS B2351)
X1,X2	油缸测压口	Test port-Cylinder	M10*1

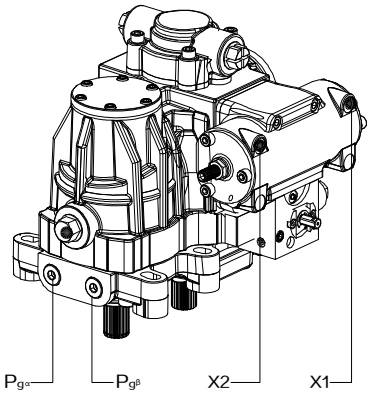

手柄位于“M”侧，即连接方式如图2.1所示。

Handle position in "M" side.The connection’s type as shown in Fig 2.1.

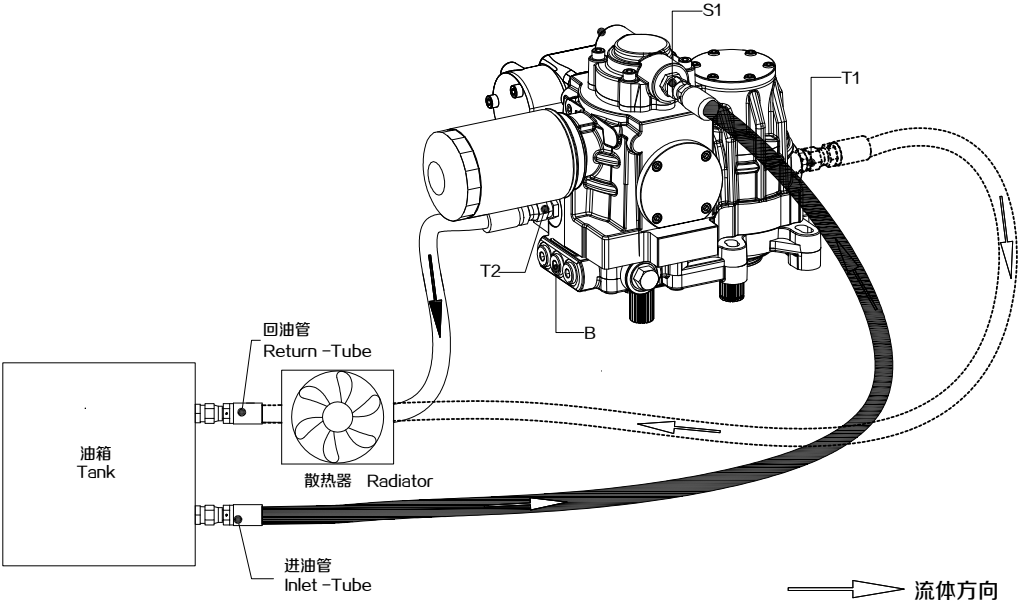

图2.1

*用户根据产品使用空间选择T1或T2连接方式，
选择其中一种即可。

手柄位于“N”侧，即连接方式如图2.2所示。

Handle position in "N" side.The connection’s type as shown in Fig 2.2.

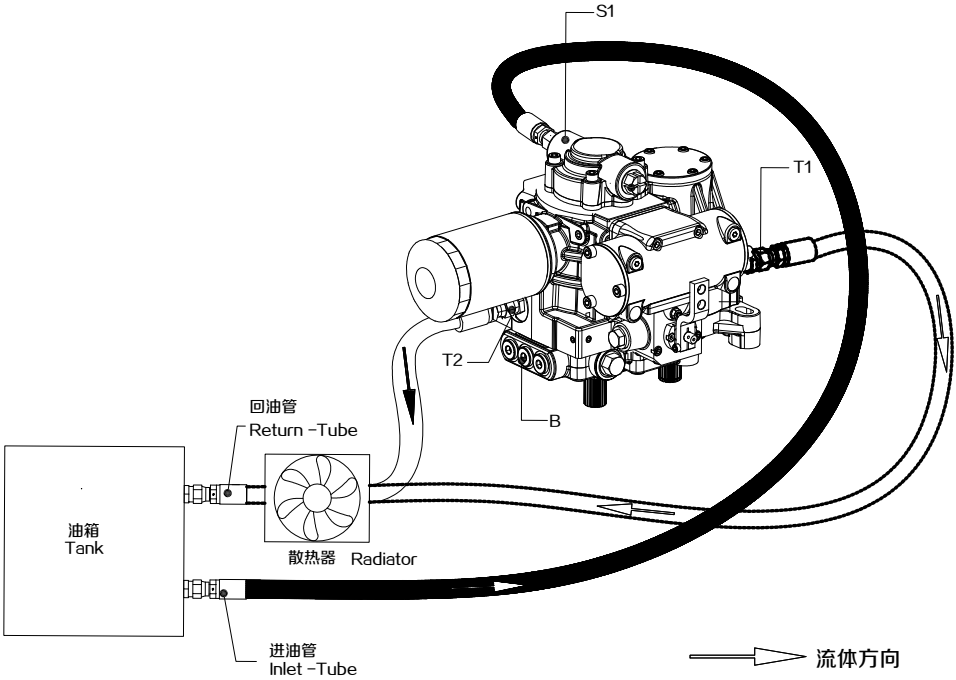

图2.2

*用户根据产品使用空间选择T1或T2连接方式，
选择其中一种即可。

浙江奥威特液压机械有限公司

地 址：浙江省台州市椒江区章安街道古桥工业区

电 话：0086-576-88981558

传 真：0086-576-88975666

网 站：http://www.aovite.com

邮 箱：aovite@aovite.com

Copyright ©2022Aovite,Ltd.